HYDRAULIC DOCK LEVELER

Easy Cleaning / Color Customization Available

PRODUCT BRIEF

Hydraulic Dock Leveler is a heavy-duty loading solution designed to bridge the gap between the truck bed and the loading dock.Powered by a hydraulic system,it offers smooth lifting, stable operation, and enhanced safety.It is ideal for warehouses,logistics centers,manufacturing plants,and high-frequency loading areas, providing reliable performance and long service life

TECHNICAL PARAMETERS

ITEM	SPECIFICATION
Platform Material	Q235 / 6-8MM Anti-slip Checkered Steel Plate
Capacity	6,000–15,000 Kg(Statics Capacity)
Hydraulic Cylinders	1 Main Cylinder + 1 Balance Cylinder
Power Supply	220V / 380V, 50Hz (Customizable)
Main Beam	Heavy-duty Reinforced Channel Beam
Size/color	Customizable
Safety Features	Emergency Stop System & Toe Guard Protection
Optional	Hot-Dip Galvanized / Chock / Weather Seal / Dock Light
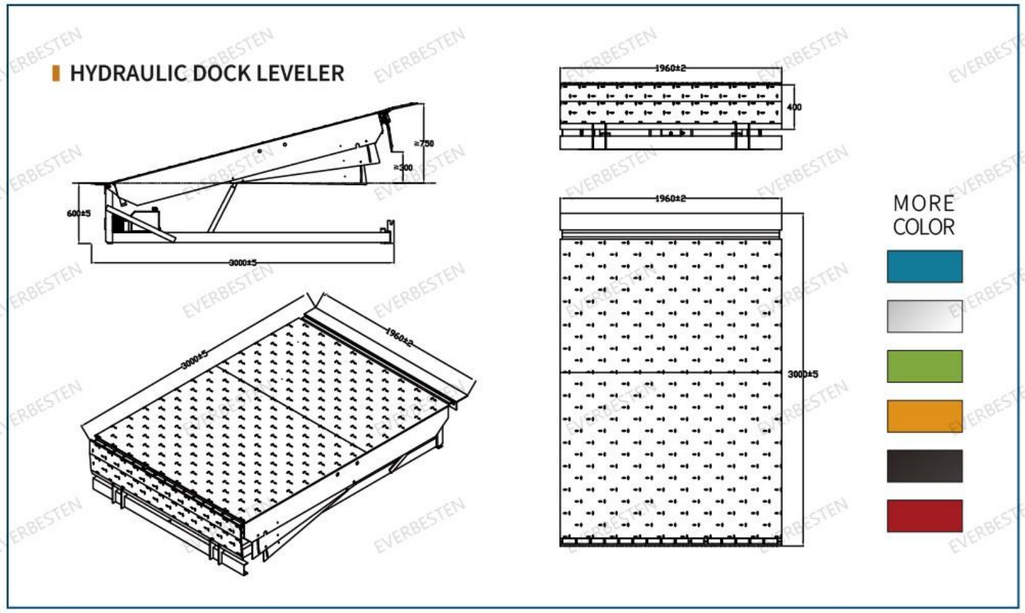
DRAWING