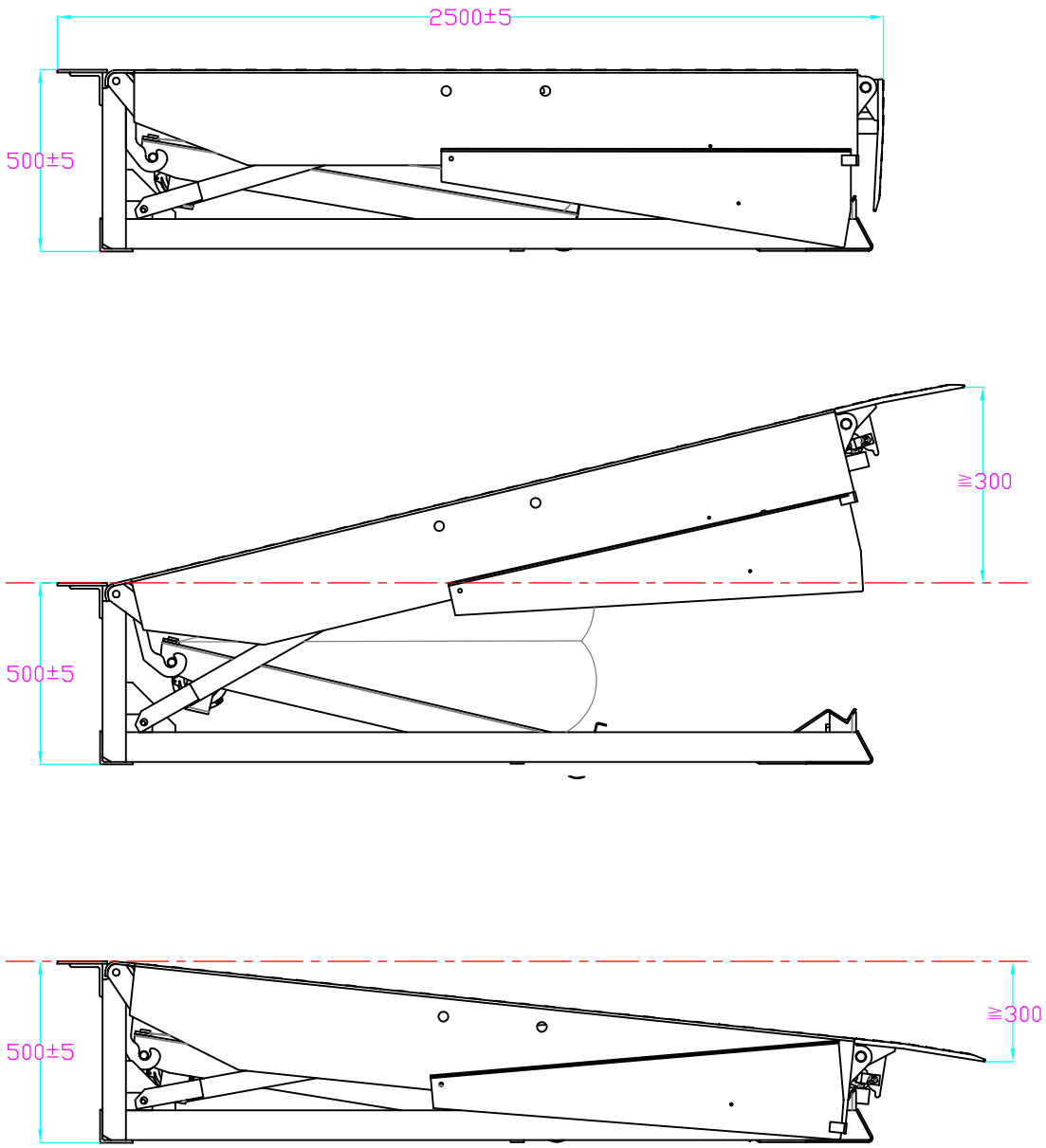

2.00x2.50x0.5

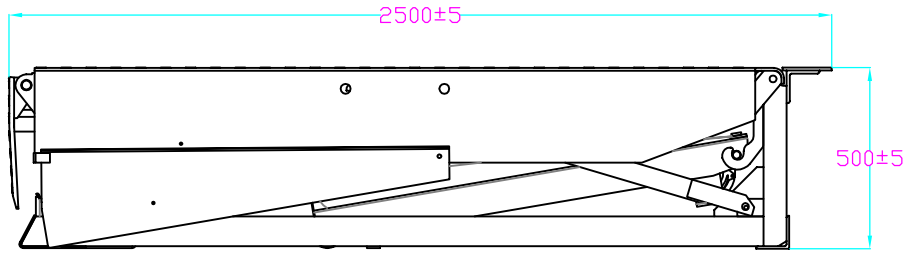

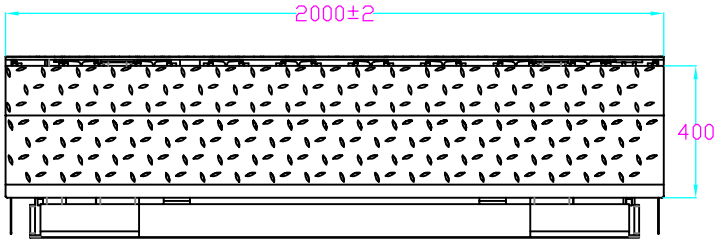

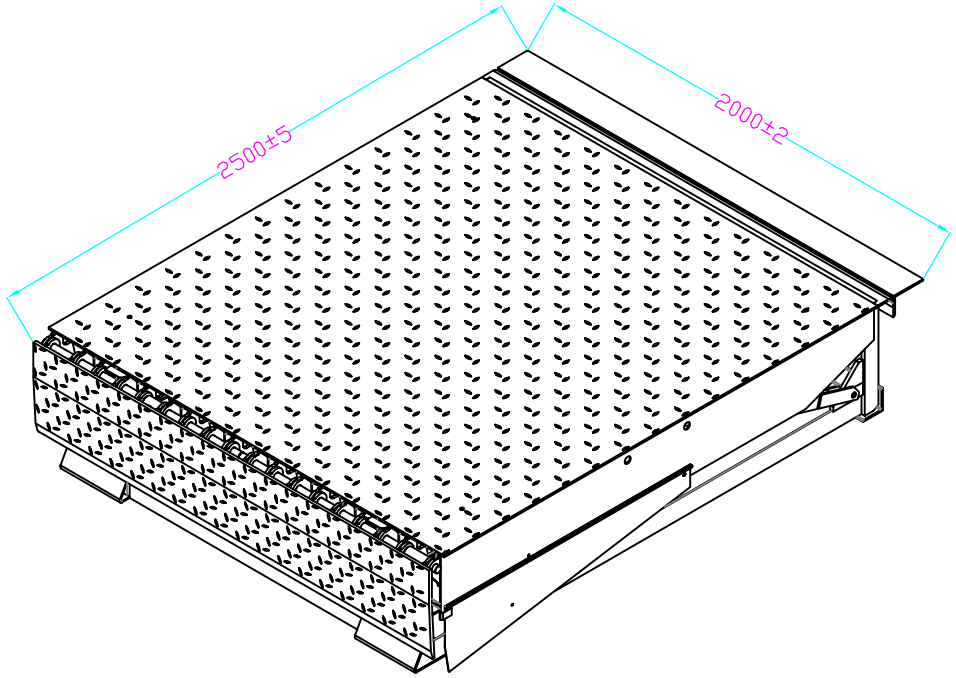

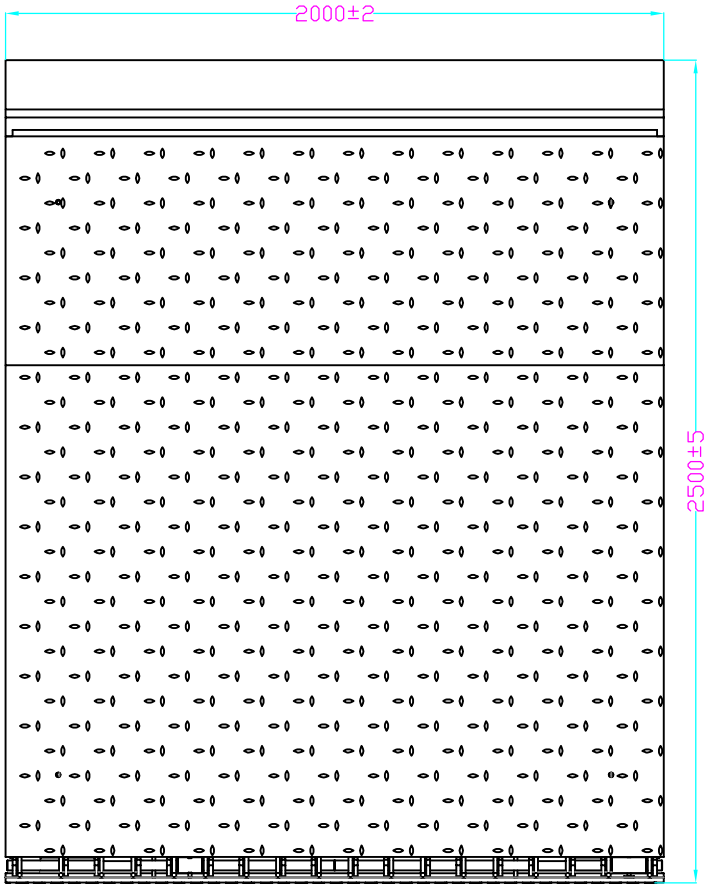

2.00x2.50x0.5